APZ1-850

Shower drain with an edge for perforated grids

Application
For indoor use
For drainage of floor-level showers
For installation into open spaces or near the wall of the shower area
For perforated stainless steel grids
For wheelchair access

Features
- Stainless steel shower drain (perfectly smooth and durable surface thanks to special surface treatment)
- Installation height from 85 mm
- Adjustable height
- Trap firmly connected to the drain – 100% waterproofing
- Self-adhesive tape for quality waterproofing
- Mechanically cleanable trap up to the waste pipe
- The collar and trap are protected by foil, and the channel itself by a polystyrene insert
- The high flow rate is achieved due to the double compartment trap system
- Possibility to buy a combined odour trap
- 25 years guarantee
- Material of shower drain: stainless steel 2 mm, AISI 304, DIN 1.4301, EN1253-1
- Trap material: polypropylene

Scope of supply
- The shower drain is assembled with the odour trap
- Fixation set: screws Ø6×50 – 2 pcs, dowels Ø10 – 2 pcs
- Self-adhesive waterproofing tape
- Protective foil covering for the drain edges and odour trap
- Protective film for trap inlet
- Installation trough cover - polystyrene

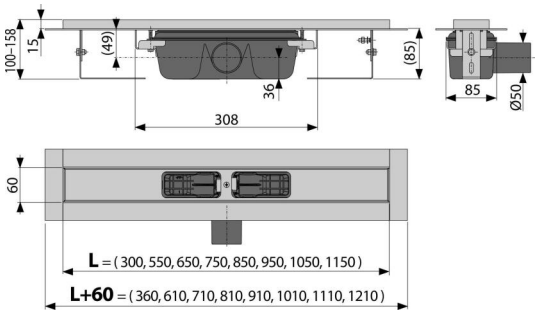

Order number, Logistic information

Code	EAN		Weight (piece | packing | palett)	Dimensions (piece | packing)	Quantity (packing | palett)
APZ1-850	8594045932942	850 mm	3,57 | 42,78 | 148,3 kg	920×135×170 | mm	12 | 36 pcs

Warranty
2/25 years *

Norms
EN 1253

Technical specifications
- Odour trap 50 mm
- Flow rate 60-68,8 l/min
- Resistance of odour trap against the pressure 982 Pa
- Waste pipe diameter 50 mm
- Minimum thickness of concrete 85 mm
- Total installation height 100-158 mm
- Load class K3 300 kg

* For more information about warranty visit https://www.alcadrain.com/warranty.

© 2026 Alcadrain s.r.o | Changes in dimensions and design reserved. | www.alcadrain.com