A564CRM2-120

Bath pop-up waste and trap, with overflow filler, chrome

Application
For filling the bath by overflow
To drain the water from the bath to the waste
For bathtubs with drain outlet Ø52 mm
For standard size bathtubs

Features
- Side G1/2" fitting for filling of pre-mixed water
- The length of the bathtub trap 120 cm
- Overflow flexi pipe
- Easy installation with three stainless steel screws
- Space-saving design in the bathtub – visible only control knob
- Control shaft made of stainless steel
- Aerator Neoperl – easy access and exchange
- Closing waste by pop-up mechanism
- Bath overflow filler, waste and trap system
- Water does not flow down on the side of the bathtub and does not leave marks
- Wet odour trap with swivel elbow

Scope of supply
- Assembly kit
- Chrome-plated stainless steel outlet grid
- Chrome-plated plastic control knob
- Chrome-plated plastic plug
- Waste and trap body with overflow
- Profiled seal
- Odour trap of polypropylene, thermally and chemically resistant, longitudinally welded

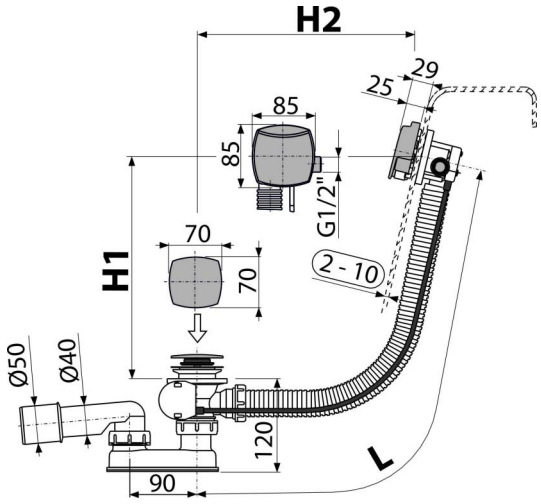

Order number, Logistic information

Code	EAN		Weight (piece | packing | palett)	Dimensions (piece | packing)	Quantity (packing | palett)
A564CRM2-120	8595580523794	120 mm	1,01 | 12,15 | - kg	380×95×210 | 595×435×395 mm	12 | - pc

Warranty
2/3 years *

Technical specifications
- Resistance of odour trap against the pressure 588 Pa
- Flow rate 48,6 l/min
- Overflow flow rate 33,6 l/min
- Thermal resistance 95 IP
- Odour trap 50 mm

* For more information about warranty visit https://www.alcadrain.com/warranty.

© 2025 Alcadrain s.r.o | Changes in dimensions and design reserved. | www.alcadrain.com