A565KM3-100

Bath pop-up waste and trap, with overflow filler, for thick-walled bathtubs, metal

Application
For filling the bath by overflow
To drain the water from the bath to the waste
For thick-walled bathtubs
For bathtubs with drain outlet Ø52 mm

Features
- Side G1/2" fitting for filling of pre-mixed water
- The length of the bathtub trap 100 cm
- Overflow flexi pipe
- Easy installation with three stainless steel screws
- Space-saving design in the bathtub – visible only control knob
- Control shaft made of stainless steel
- Aerator Neoperl – easy access and exchange
- Closing waste by pop-up mechanism
- Bath overflow filler, waste and trap system
- Water does not flow down on the side of the bathtub and does not leave marks
- Wet odour trap with swivel elbow

Scope of supply
- Assembly kit
- Chrome-plated metal control knob
- Chrome-plated metal plug
- Chrome-plated brass outlet grid
- Waste and trap body with overflow
- Profiled seal
- Odour trap of polypropylene, thermally and chemically resistant, longitudinally welded

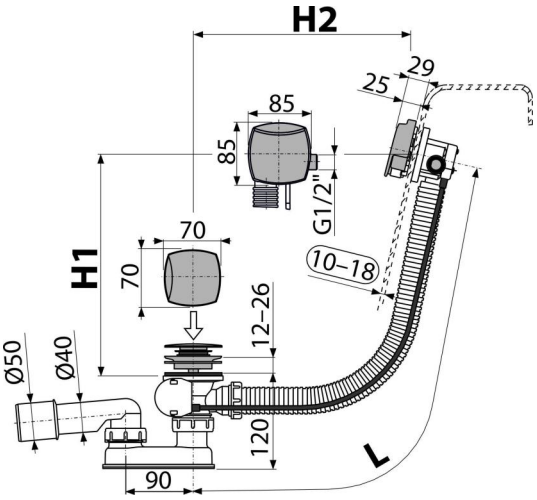

Order number, Logistic information

Code	EAN	Weight (piece | packing | palett)	Dimensions (piece | packing)	Quantity (packing | palett)
A565KM3-100	8595580530976	1,30 | 15,54 | 268,7 kg	380×95×210 | 595×435×395 mm	12 | 192 pcs

Warranty
2/3 years *

Norms
EN 274

Technical specifications
- Resistance of odour trap against the pressure 588 Pa
- Flow rate 48,6 l/min
- Overflow flow rate 33,6 l/min
- Thermal resistance 95 °C
- Odour trap 50 mm

* For more information about warranty visit https://www.alcadrain.com/warranty.

© 2025 Alcadrain s.r.o | Changes in dimensions and design reserved. | www.alcadrain.com