AS101 Sádromodul

Pre-wall installation system for dry build up (plasterboard)

Application

For installation in Alcasystem system walls
For mounting in front of a support wall or in to a plasterboard construction
For installation of wall-hung WC pans with a connecting pitch of 180 mm or 230 mm
For floor thickness 0–200 mm
For wall-hung WC

Features

- Dual flush independently adjustable with hygienic reserve
- Compatible with all ALCA flush plates
- The construction of polystyrene insulation prevents condensation forming on the surface of the tank and dampens the vibrations from the tank into the building structure
- The frame allows the anchoring to a separate sufficiently strong plasterboard partition, in front of the bearing wall
- The service opening cover simplifies assembly and prevents the penetration of moisture and impurities
- Frame material: powder-coated metal
- Installation depth adjustable from 20–95 mm
- Suitable for installation of remote or sensor flushing
- The cistern is made of one piece, thus ensuring 100% impermeability
- The installed module is covered with a plasterboard panel and there is no need for any additional fixing or anchoring elements
- Adjustable anchor feet and a spring-lock system, with a range of 0–200 mm
- Sliding rail holder for the waste connector can be set to eight positions between 0–93 mm
- Prepared for connecting a bracket with a DG 1/2" conversion for bidet seats and sprays
- Water supply from rear / top / left / right
- Angle valve with the ability to connect to the Mepla piping system
- Maintenance work without using any tools
- Installation depth 125 mm
- Visible marks for both leveling and the centerline

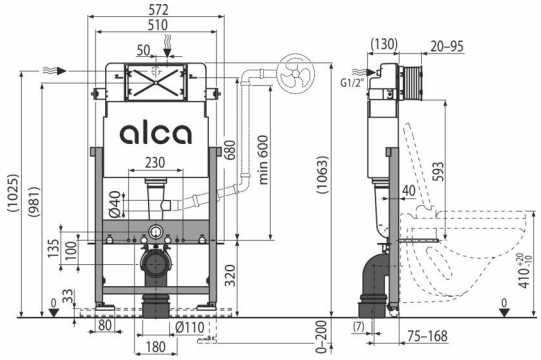

Scope of supply

- Fixation material for fixing the WC pan: threaded rod M12 – 2 pcs, washers – 4 pcs , cover – 2 pcs, nut – 2 pcs, thread protector – 2 pcs
- Fixation set: screw Ø8×60 – 4 pcs, dowel Ø12 – 4 pcs
- Elbow waste connector HT 90/90 polyethylene, PE-HD
- The 2 piece cover of the service opening is simply adjustable
- Cistern with fill and flush valve
- Waste reduction HT 90/110 polyethylene, PE-HD
- End-caps set for protecting the connecting holes during installation of the system
- Set for inserting toilet tablets
- Self-supporting frame
- Threading 1/2" for water connection with an integrated angle valve 1/2"–3/8"
- Drainage seal, PP connector, connector seal
- Inlet seal, PP outlet, wrapping seal

Order number, Logistic information

Code	EAN	Weight (piece | packing | palett)	Dimensions (piece | packing)	Quantity (packing | palett)
AS101	8595580577155	12,97 | 12,97 | 279,4 kg	1177×575×132 | 1177×575×132 mm	1 | 20 pcs

Warranty

2/15 years *

Norms

EN 14124, EN 14055

Technical specifications

- Recommended range of water pressure 0,3-0,5 MPa
- Functional range of water pressure 0,05-1,6 MPa
- Hygienic reserve 3 l
- Small flush 2,5-3,5 l
- Water volume in the cistern 9 l
- Water connection from the back or top via mounting holes G1/2 "
- Factory setting of small flush 3 l
- Factory setting of large flush 6 l
- Big flush 6-9 l
- Load test 400 kg

* For more information about warranty visit https://www.alcadrain.com/warranty.

© 2025 Alcadrain s.r.o | Changes in dimensions and design reserved. | www.alcadrain.com